WATER ST.
BRASS
JAMESTOWN

29540 3-1/2” x 3-1/2” Hinge - Residential Grade Square Corners

1/2” Finials

Made to order.
Lead time 4 - 6 weeks.

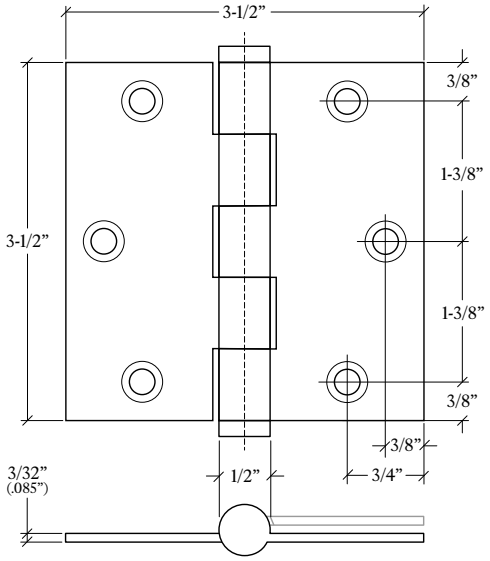

Rev. 2026