WATER STREET

20157 DOOR BELL TRIM PLATE

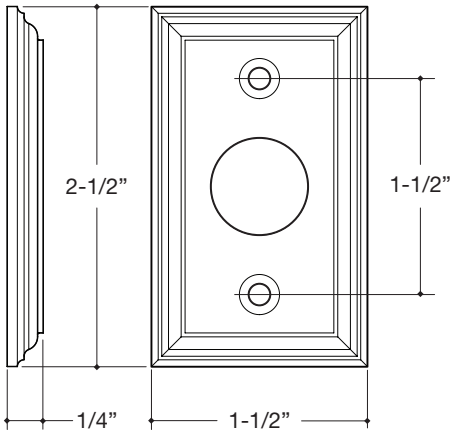

All escutcheons made to order.
Custom sizes and profiles available.

Manufactured in Lakewood, NY.

4515 GLEASON ROAD • PO BOX 463 • LAKEWOOD NY 14750
PHONE: (716) 763-0059 • TOLL FREE: (855) 664-4321 • FAX: 716-763-6043
INFO@WATERSTREETBRASS.COM • WWW.WATERSTREETBRASS.COM