WATER STREET
JAMESTOWN NEW YORK

29600 4" x 4" Hinge
Architectural Grade
Ball Bearing
Square Corners

1/2" Finials

Made to order.
Lead time 4 - 6 weeks.

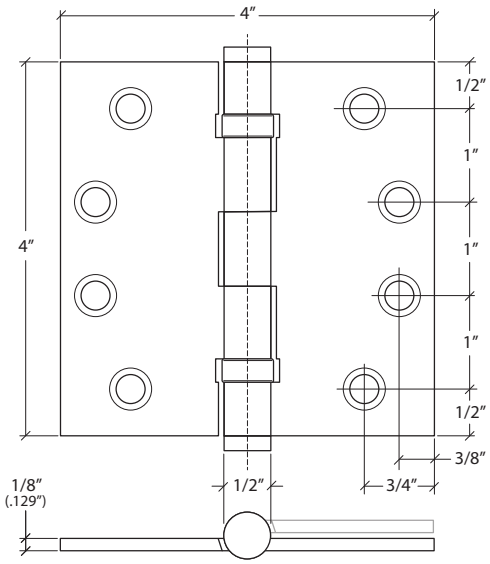

Rev. 2022