WATER STREET
JAMESTOWN NEW YORK

29550 3-1/2" x 3-1/2" Hinge
Architectural Grade
1/4" Radius Corners

1/2" Finials

Made to order.
Lead time 4 - 6 weeks.

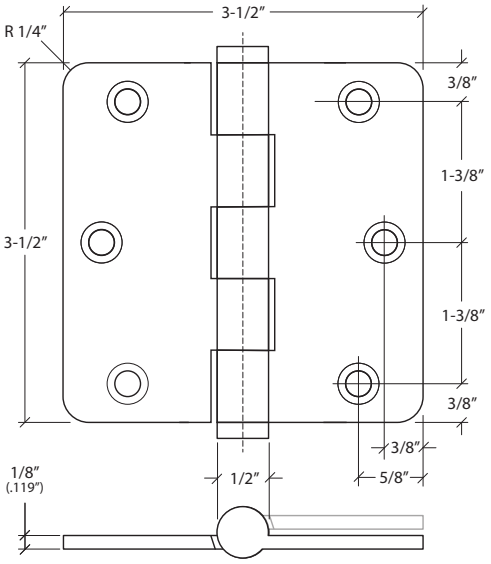

Rev. 2022